D12D-A MH, D12C-A MP

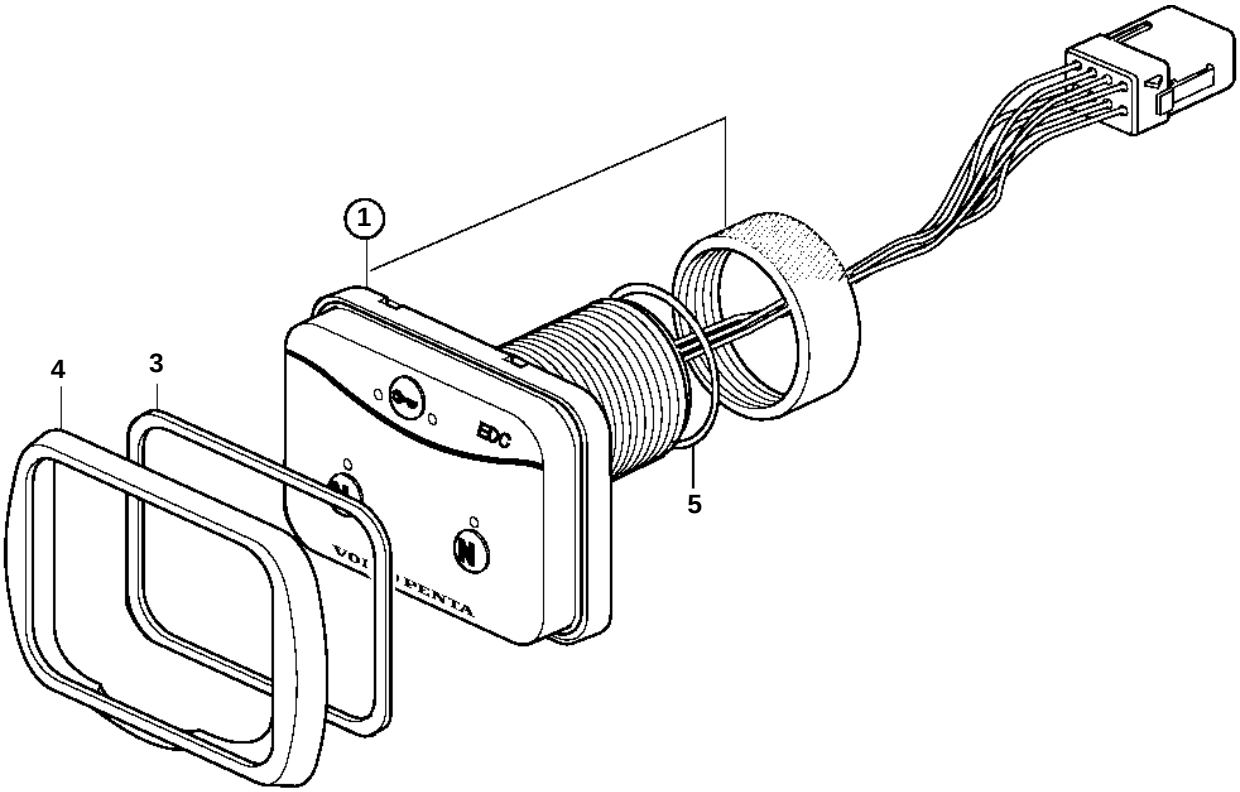

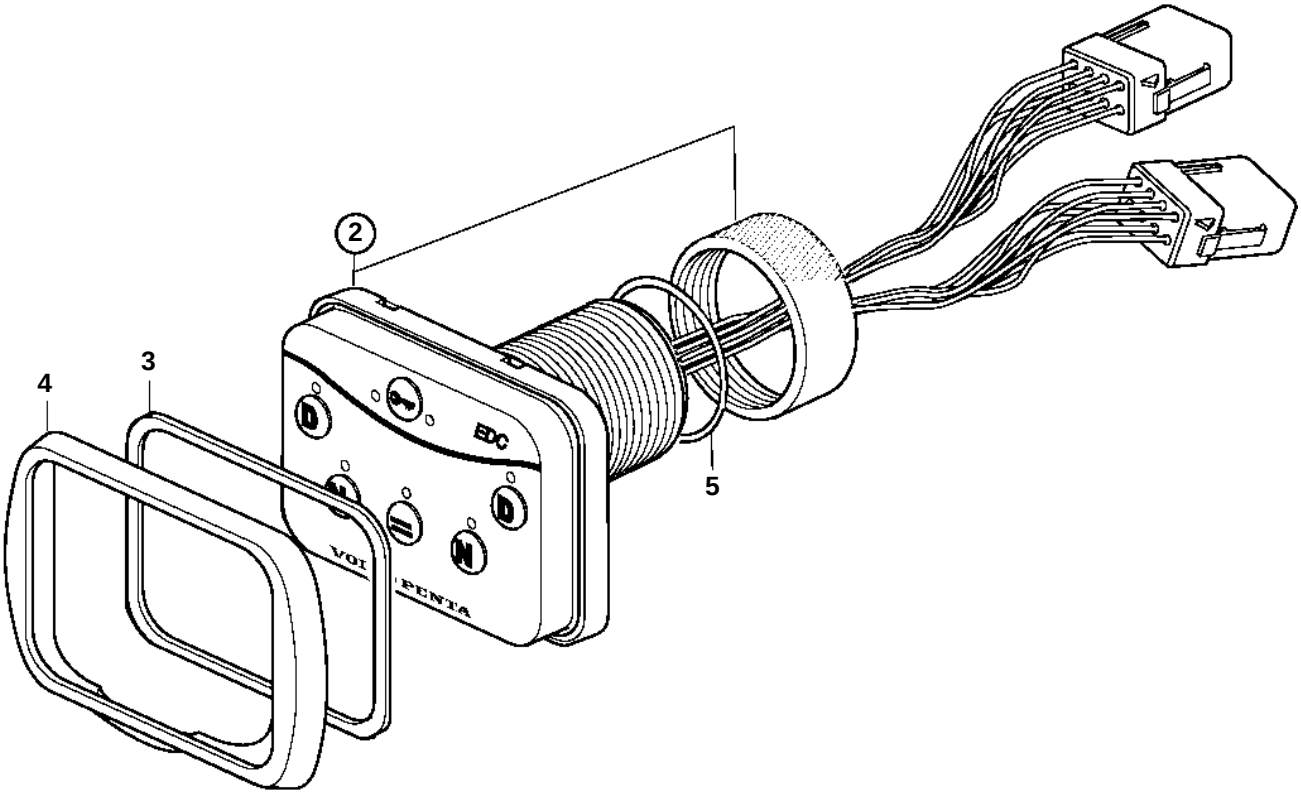

17860

D12D-A MH, D12C-A MP

REF	PART NO.	QTY	DESCRIPTION	NOTES
2	874122	1	Control panel	Twin engine installation. For single or multi stations., For 2x8-pole system.
3	874192	1	· Gasket	ALT
4	874149	1	· Frame	ALT
5	874191	1	· O-ring	